Half Adder

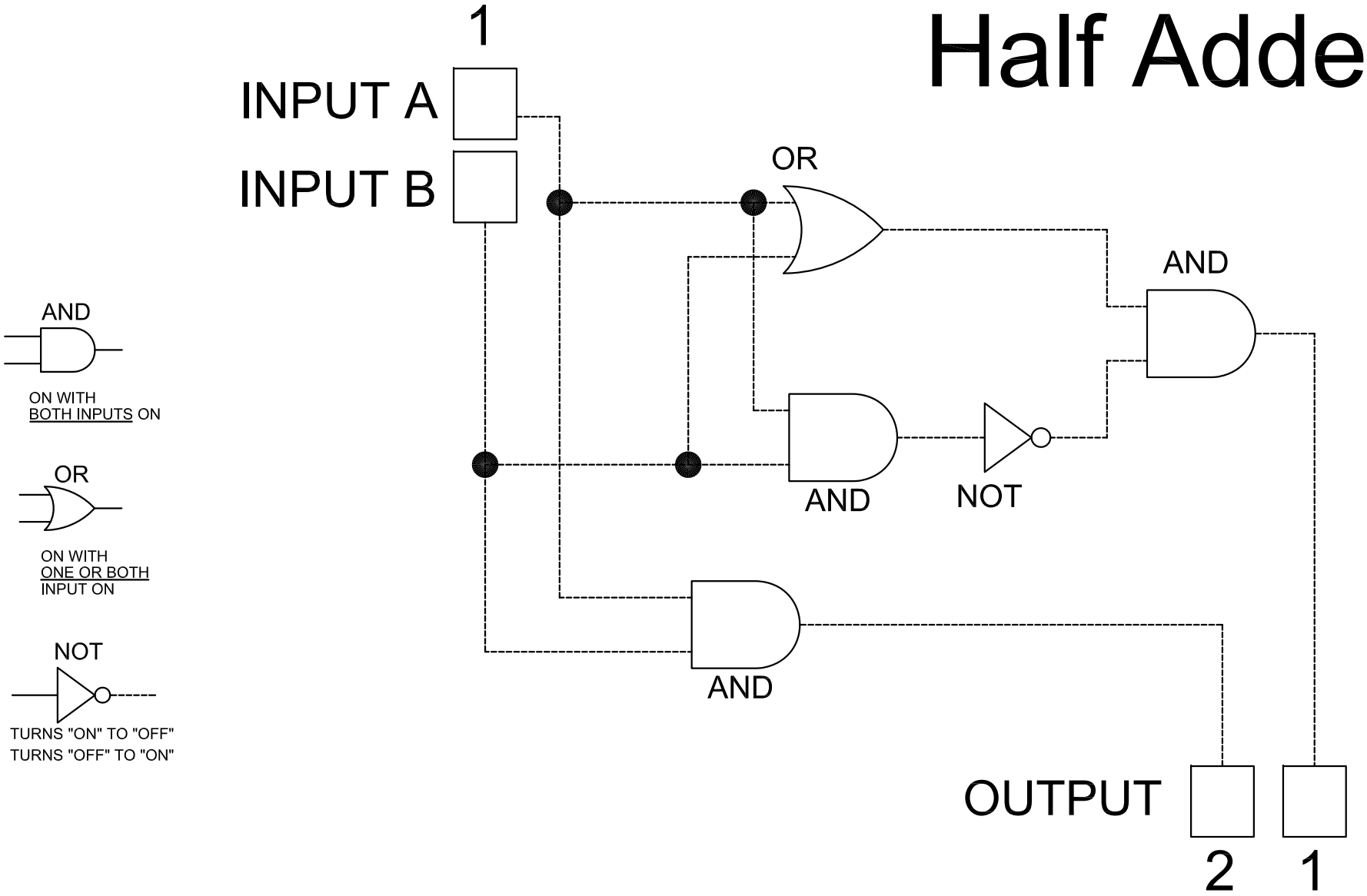
1
INPUT A
INPUT B
OR
AND
AND
NOT
AND
OUTPUT
2
1
AND
ON WITH
BOTH INPUTS ON
OR
ON WITH
ONE OR BOTH
INPUT ON
NOT
TURNS "ON" TO "OFF"
TURNS "OFF" TO "ON"